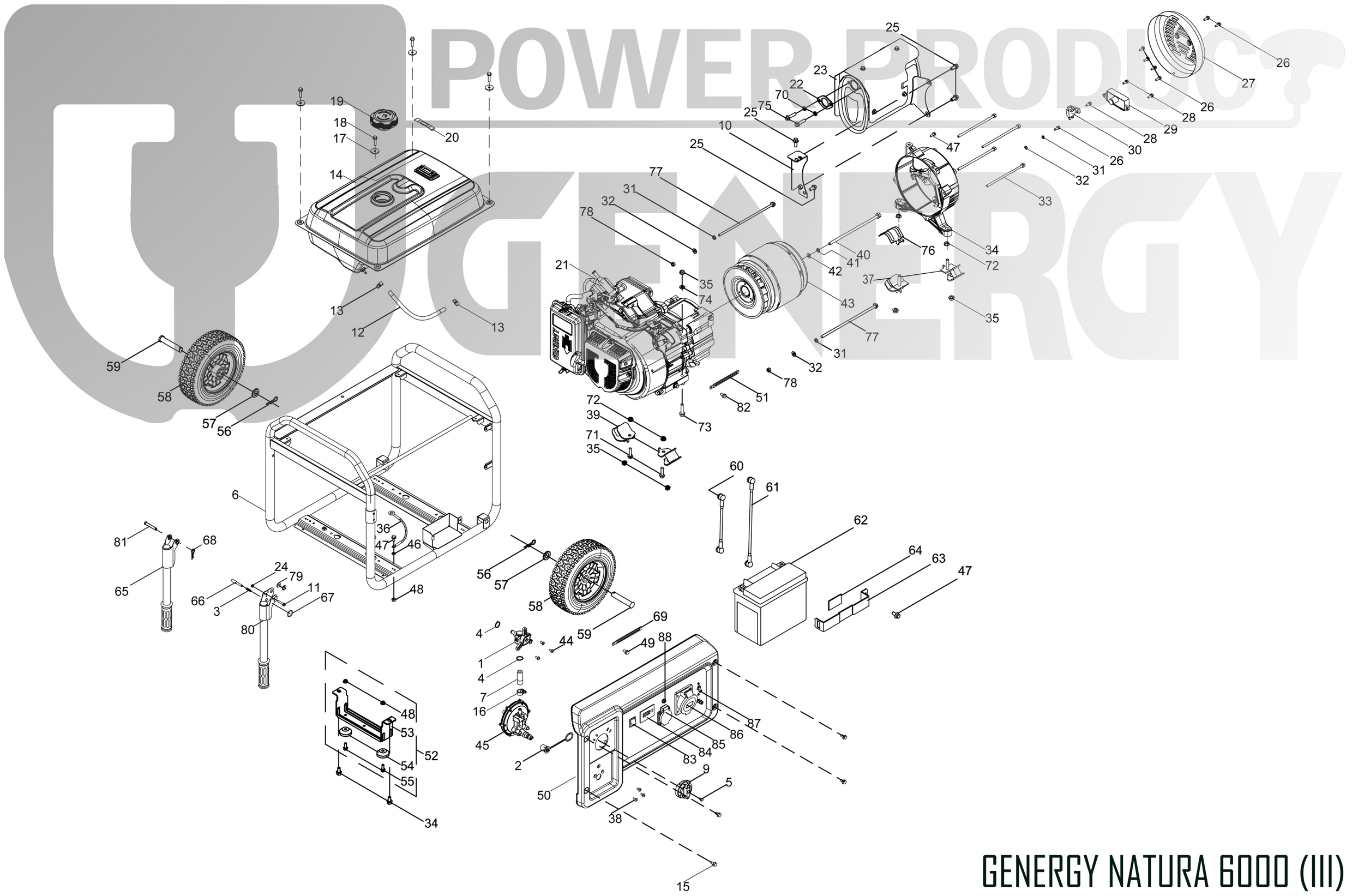

GENERGY NATURA 6000 (III)

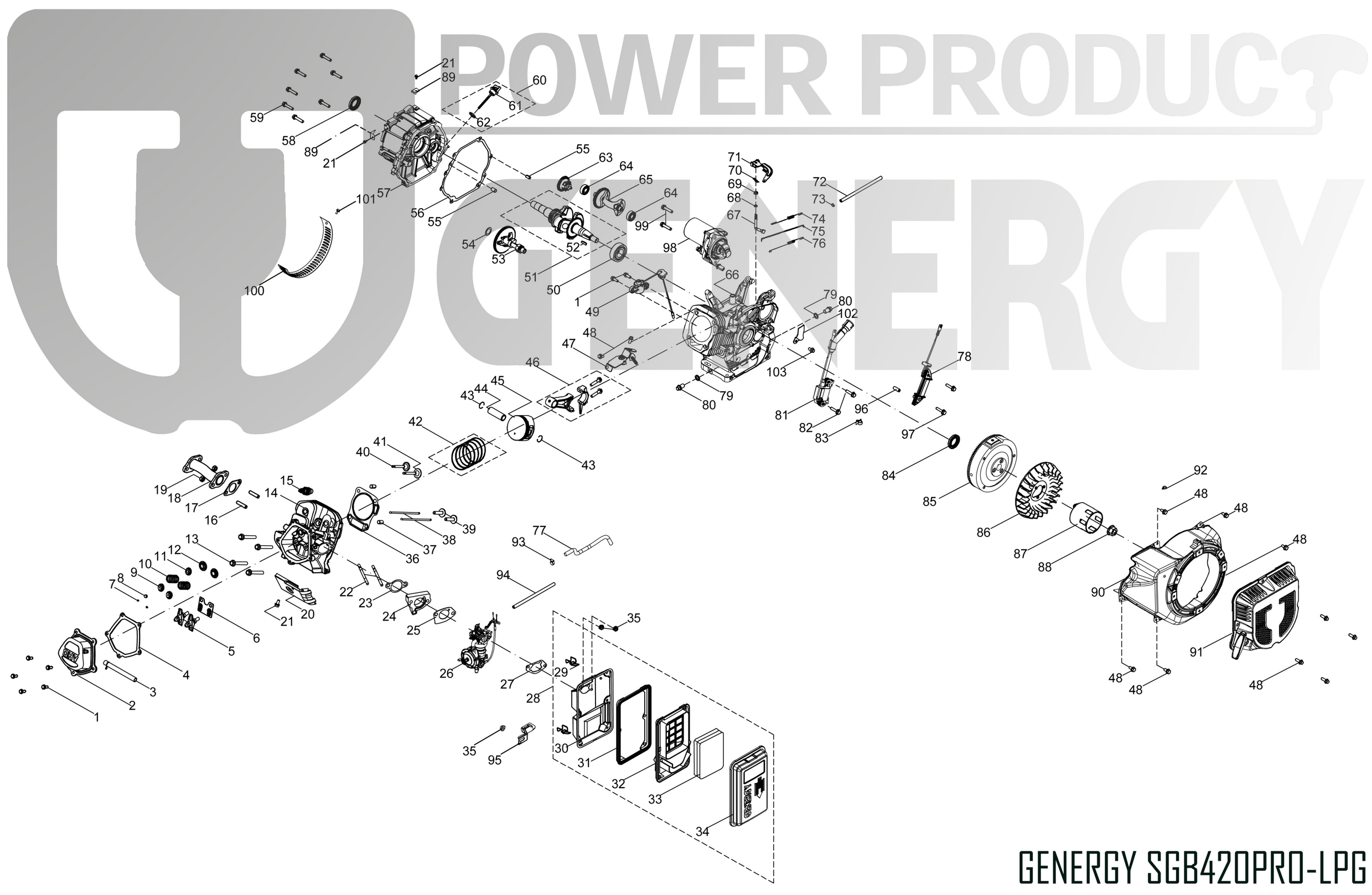

GENERGY SGB420PRO-LPG